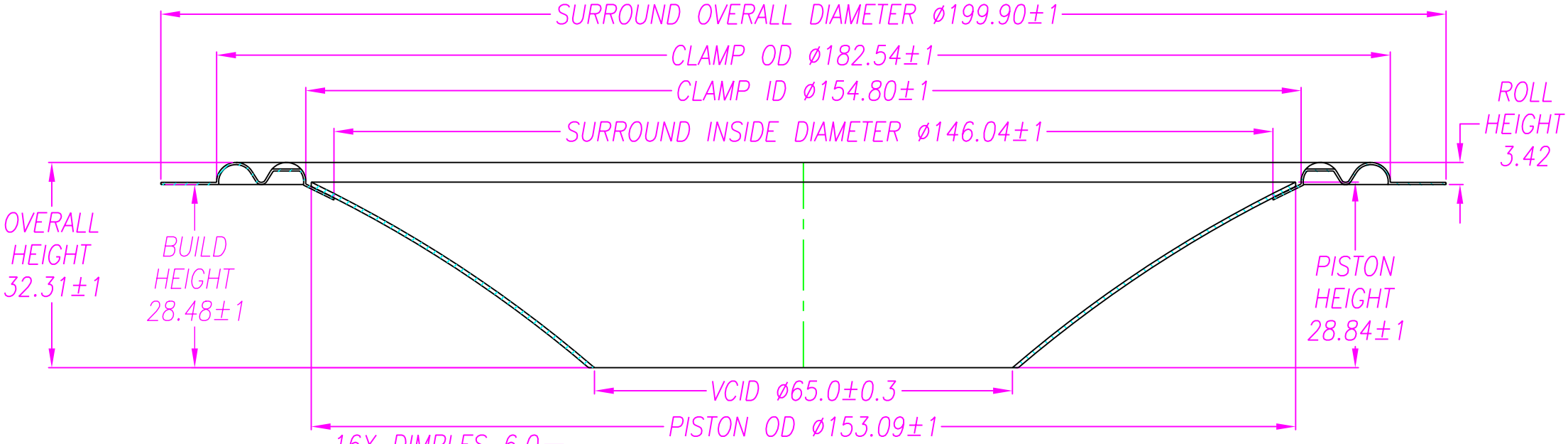
SURROUND OVERALL DIAMETER ø199.90±1
CLAMP OD ø182.54±1
CLAMP ID ø154.80±1
SURROUND INSIDE DIAMETER ø146.04±1
ROLL HEIGHT 3.42
OVERALL HEIGHT 32.31±1
BUILD HEIGHT 28.48±1
PISTON HEIGHT 28.84±1
VCID ø65.0±0.3
PISTON OD ø153.09±1

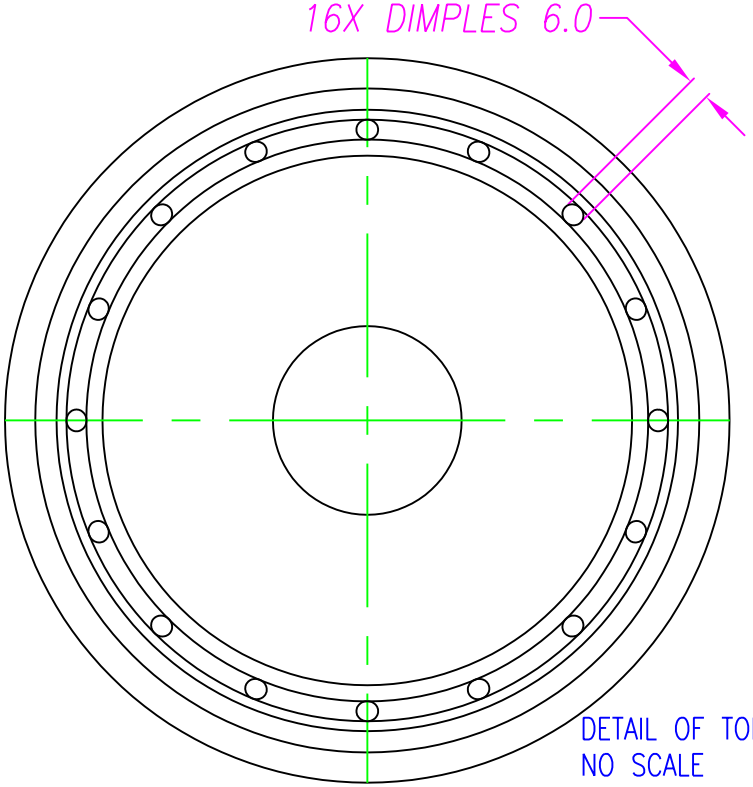
16X DIMPLES 6.0
CP153/23-SC181B/6-R
DETAIL OF TOP VIEW
NO SCALE