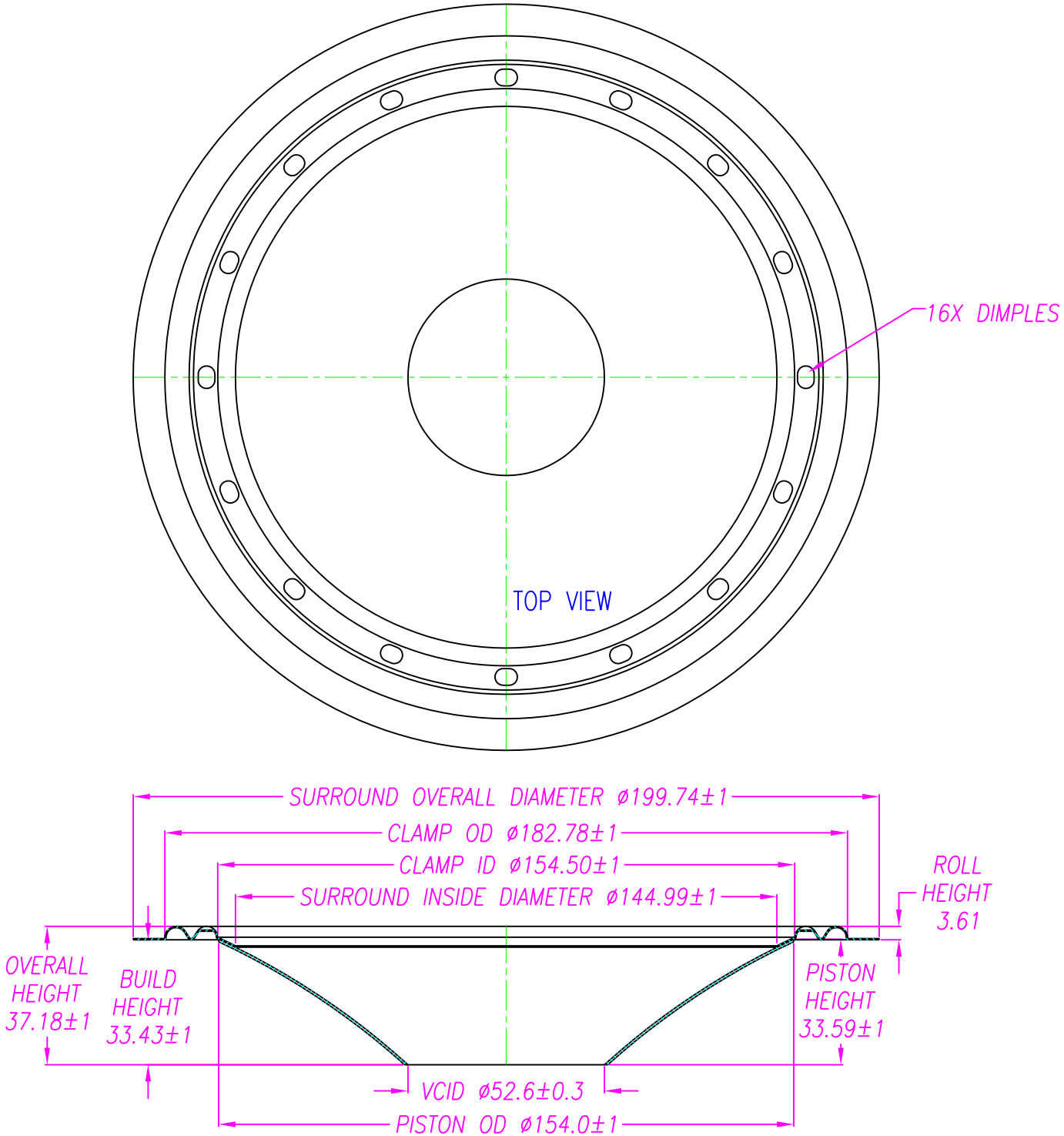

CP154/10-SC181B/8-F