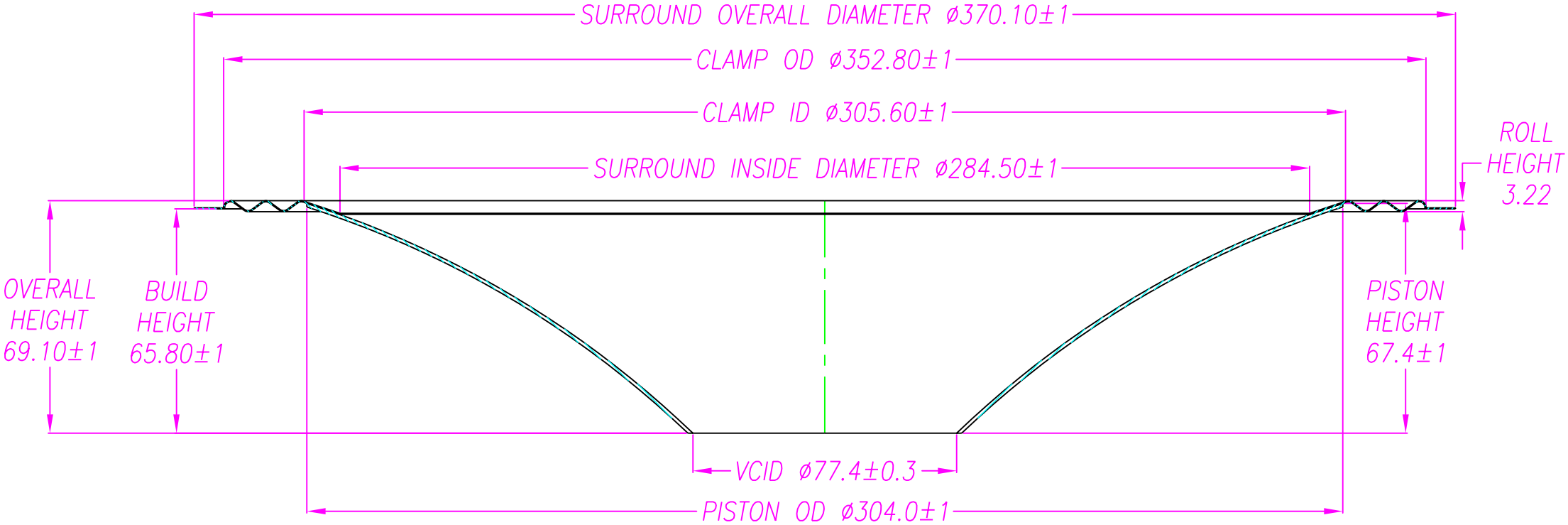

CP304/12-SC351A/1-F