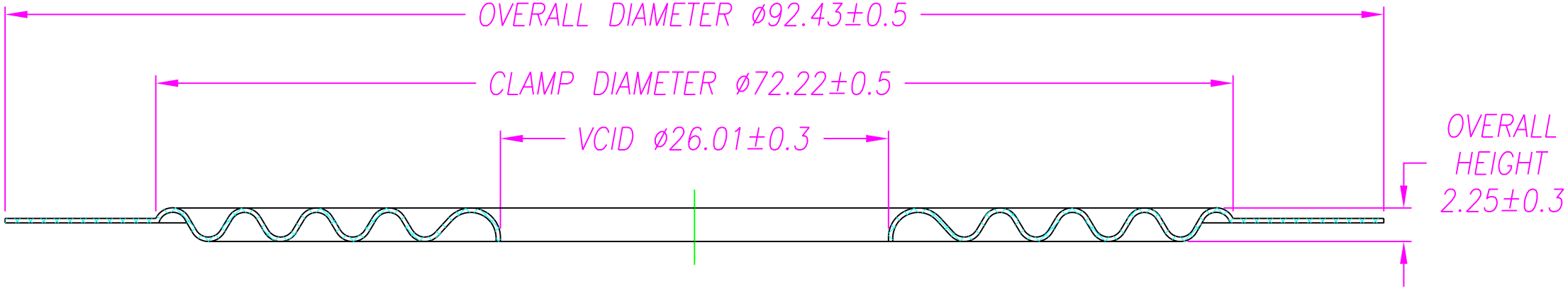

SPIDER-SU-26-1-F