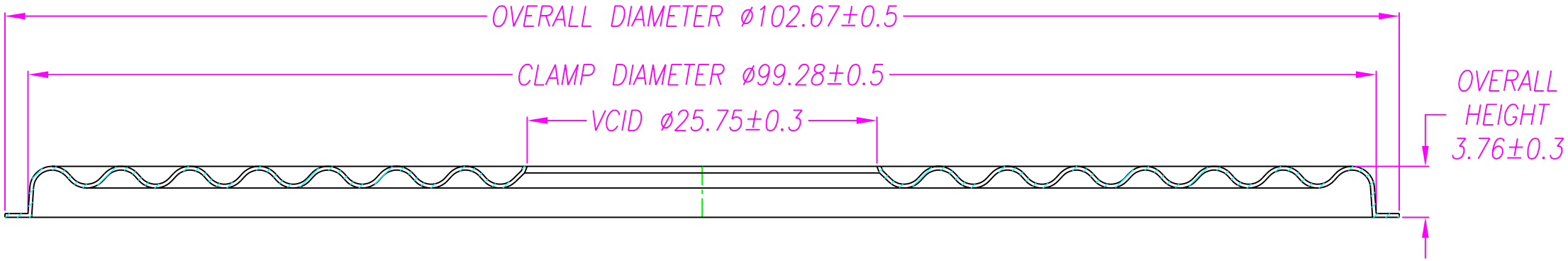

SPIDER-SU-26-5-F